Panasonic
ideas for life

Ideas for Wireless Solutions

Bluetooth 2.1 HCI Module PAN1325

OUTLINES - ENW8918A2JF

Panasonic's new PAN1325 Host Controlled Interface (HCI) Bluetooth RF module brings Texas Instrument's seventh generation Bluetooth core integrated circuit, the CC2560, to an easy to use module format. Panasonic's tiny footprint technology has produced a module of only 85.5mm². The module is designed to accommodate PCBs pad pitch of 1.3mm and as little as two layers for easy implementation and manufacturing.
This module has been designed to be 100% pin compatible with the next generation of Bluetooth Dual Mode Low Energy devices. This unique design feature enables designers to seamlessly transition between Bluetooth Classic and Low Energy modules.
The PAN1325 makes connectivity between mobile devices such as cellular phones and small button cell battery powered devices like fitness sensors, watches, healthcare, entertainment and mobile accessories easily implemented, creating a seamless data chain from sensors to the web.
More than 250m (line of side) with 6dBm Tx power could be reached with the PAN1325ETU platform.

FEATURES

General
- Best-in-class Bluetooth RF performance (Tx, Rx sensitivity, blocking)
- Fully Qualified Bluetooth v2.1 EDR, FCC and IC listed, CE complied
- Dimensions: 9.0 mm x 9.5 mm x 1.8 mm (width x length x height)
- Operating Temperature Range: -20ºC to +70ºC
- Supply Voltage Range: 1.7 - 4.8 V
- Based upon TI's CC2560
- Profiles: SPP, HDP, Audio and others
  (Integrates with TI's ultra low-power MSP430 microprocessor)
- Very fast algorithm for both ACL and eSCO
- Supports Extended Range Tx power with 10.5dBm typical output
- Low power scan method and inquiry scans at 1/3rd normal power

Interfaces
- 3.25 MBaud UART with transport layer detection
  (HCI UART, HCI Three and Four Wire UART)
- PCM/I2S interface for digital audio
- WLAN coexistence interface
- General purpose I/Os with interrupt capabilities.

MODULES WIRELESS
Panasonic Electronic Devices Europe GmbH

Design and Specifications are subject to change without notice. Ask the factory for technical specifications before purchase and/or use. If there is any doubt regarding the safety of this product, kindly inform us immediately for technical consultation.

www.pedeu.panasonic.de
wireless@eu.panasonic.com

Hardware Status:
Pre Production

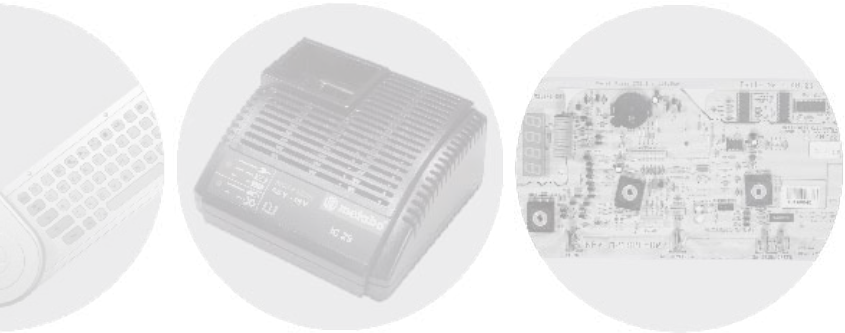

CONTACT

Hy-Line Communication GmbH

Inselkammerstr. 10
82008 Unterhaching/Munich, Germany

Tel. +49 (0)89-614503-236
Fax +49 (0)89-6140960

E-Mail: c-pfaff@hy-line.de
HTTP: www.hy-line.de/communication

APPLICATIONS

All Wireless Applications
- Medical Applications
- Printers
- Access Points
- Wireless Sensors
- Industrial Applications
- Cable Replacement
- Personal Digital Assistants (PDAs)
- PC Motherboards & - Peripherals
- Scanners
- Mono & Stereo Audio Applications

BLOCK DIAGRAM

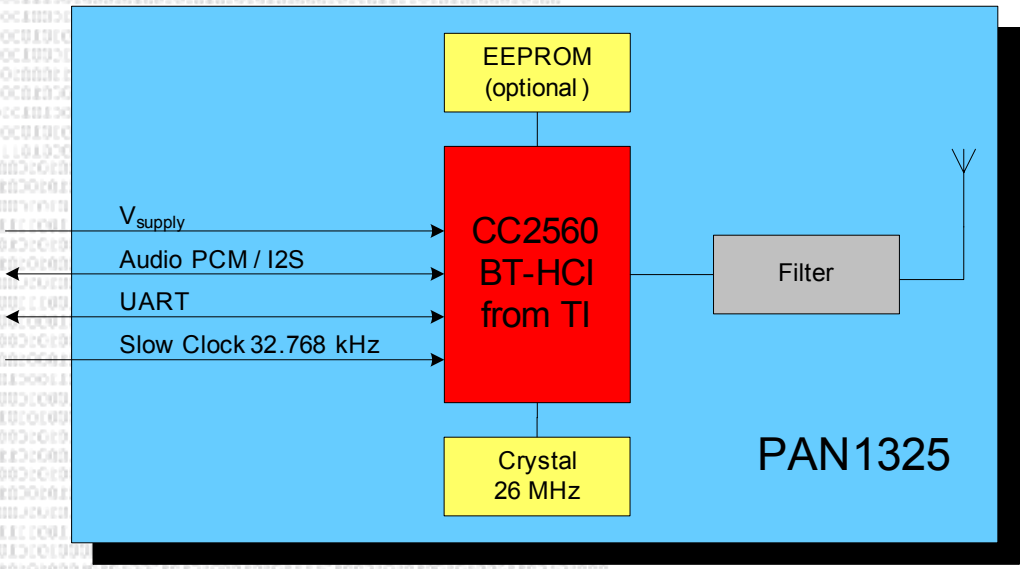

TECHNICAL CHARACTERISTICS

Parameter	Value	Condition / Note
Receiver Sensitivity (BER=10^{-3})	-93 dBm	ideal wanted signal
Output Power	10.5 dBm typ.	max. 4 dBm for BT Class2
Power Supply	1,7 - 4,8 V	Battery or DC/DC
Ultra Low Power Scan	135 µA	1.28s Interval
eSCO Link 2-EV3	8.3 mA	Enhanced Data Rate, 544.0 kb/s (1)
EDR 3-DH1\3-DH5	39.2 mA	Enhanced Data Rate, 544.0 kb/s (1)
Operating Temperature Range	-20°C to +70°C	-40°C to +85°C with EEPROM

(1) Figure indicates maximum possible data rate with this packet type